Journal of Labelled Compounds and Radiopharmaceuticals—Vol. XXVII, No. 2

THE SYNTHESIS OF DEUTERIUM-LABELLED 2-BROMOETHANOL, ACRYLONITRILE, ACRYLAMIDE, 2-AMINOETHANOL, 2-BROMOETHYLAMINE HYDROBROMIDE AND 1-BROMO-2-CHLOROETHANE.

Ian Bird and Peter B. Farmer

MRC Toxicology Unit, Medical Research Council Laboratories,
Woodmansterne Road, Carshalton, Surrey, SM5 4EF, UK.

SUMMARY

Methods are described for the synthesis of [$^2H_4$]-2-bromoethanol, [1-$^2H_2$]-2-bromoethanol, [2-$^2H_2$]-2-bromoethanol, [$^2H_3$]-acrylonitrile and [$^2H_3$]-acrylamide from 2-benzyloxyacetic acid. In the synthesis of [1-$^2H_2$]-1-bromo-2-chloroethane and [2-$^2H_2$]-1-bromo-2-chloroethane from chloroacetonitrile *via* deuterated 2-aminoethanol and [1-$^2H_2$]-2-bromoethylamine hydrobromide or [2-$^2H_2$]-2-bromoethylamine hydrobromide some randomisation of the halogens occurred, and difficulties were experienced in preparing isotopically pure products.

Key words: [$^2H_2$]-2-Bromoethanol, [$^2H_4$]-2-Bromoethanol, [$^2H_3$]-Acrylonitrile, [$^2H_3$]-Acrylamide, [$^2H_2$]-2-Aminoethanol, [$^2H_2$]-2-Bromoethylamine hydrobromide, [$^2H_2$]-1-Bromo-2-chloroethane.

0362–4803/89/020199–18$09.00
© 1989 by John Wiley & Sons, Ltd.
Received June 22, 1988

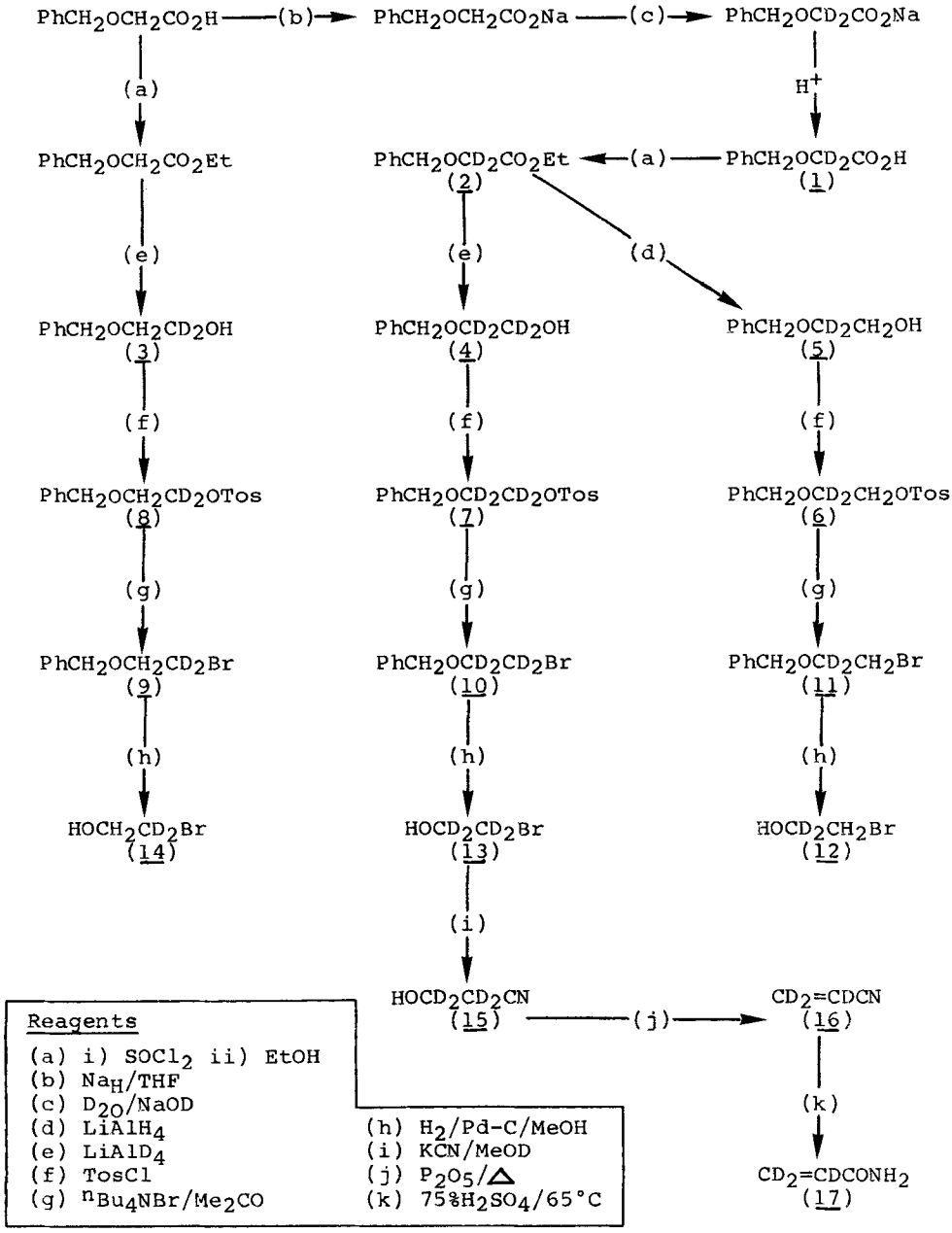

Figure 1

In vivo studies on the metabolism of several low molecular weight carcinogenic species (e.g. ethylene oxide, acrylamide, and 1,2-dichloroethane) required the preparation of a variety of C_2

or C_3 compounds bearing deuterium labels. These compounds have been used in the preparation of labelled analogues of the adducts formed between the carcinogens and proteins. These deuterated adducts are then used as internal standards for the gas-chromatography - mass spectrometry (GC-MS) quantitation of the unlabelled adducts found in proteins from populations exposed to the respective carcinogens. Thus, for example, ethylene oxide reacts with histidine residues in proteins yielding N^{τ}-(2-hydroxyethyl) histidine. Exposure to ethylene oxide may be determined by GC-MS analysis of the alkylated amino acid using N^{τ}-(2-hydroxy[$^2H_4$]ethyl) histidine as internal standard[1-3]. Similarly acrylamide exposure may be monitored by GC-MS determinations of its cysteine adduct in proteins [S-(2-carboxamidoethyl)cysteine] using the [$^2H_3$]-labelled analogue as internal standard[4].

The synthesis of [$^2H_3$]-acrylamide, which also includes the preparation of deuterated bromoethanol and acrylonitrile is summarised in Figure 1.

The literature[5,6] suggests that lithium aluminium deuteride/aluminium chloride reduction of bromoacetyl chloride and chloroacetyl chloride may give useful yields of [1-$^2H_2$]-2-bromoethanol and [1-$^2H_2$]-2-chloroethanol respectively, but later work[7] mentions difficulties encountered. Recently those methods have been successfully applied to the synthesis of the deuterium labelled 2-bromoethanols (12),(13),(14)[8]. We report a different approach.

[2-$^2H_2$]-2-benzyloxyacetic acid (1), prepared similarly to the description by Campbell[9] using the method of Ives and Wilks[10], was converted to its ethyl ester (2) and then reduced with lithium aluminium deuteride or lithium aluminium hydride to [1,2-$^2H_4$]-2-benzyloxyethanol (4) or [2-$^2H_2$]-2-benzyloxyethanol (5). The tosylates of these alcohols, (7),(6), were reacted with

a two molar excess of tetra-n-butylammonium bromide in acetone, which gave a 95% conversion to the corresponding 2-benzyloxyethyl bromides (10),(11). Deprotection of these compounds was achieved under hydrogen in methanol solution, yielding [$^2H_4$]-2-bromoethanol (13) and [1-$^2H_2$]-2-bromoethanol (12). [2-$^2H_2$]-2-bromoethanol (14) was prepared by an analogous route via the reduction with lithium aluminium deuteride of unlabelled ethyl 2-benzyloxyacetate.

[2,3-$^2H_4$]-3-hydroxypropionitrile (15) was obtained from (13) by treatment with sodium cyanide in deuterio-methanol (CH_3O^2H).

[$^2H_3$]-Acrylonitrile (16) was obtained in ca. 40% yield by heat treatment of crude samples of (15) with phosphorus pentoxide, and was then hydrolysed to [$^2H_3$]-acrylamide. A 70% yield of recrystallised product was obtained, whose d_3-content was confirmed by CI mass spectrometry.

Both deuterated 2-bromoethanol and acrylamide have been used to prepare labelled internal standards by their reaction with cysteine sulphydryl groups. These details are recorded elsewhere[4].

The synthesis of pure samples of [1-$^2H_2$]-1-bromo-2-chloroethane and [2-$^2H_2$]-1-bromo-2-chloroethane, which were required for mechanistic studies of the carcinogenic mechanism of action of 1,2-dichloroethane proved difficult to achieve without some randomisation of the halogens occurring. 2-Bromoethanol-p-toluene sulphonate in reaction with chloride ion was less satisfactory than the reaction of 2-chloroethanol-p-toluene sulphonate with bromide ion, even though the latter resulted in a mixture of 1-bromo-2-chloroethane, 1,2-dichloroethane and 1,2-dibromoethane. An alternative approach which also augments the work of Hogg and Schowen[7], is summarised in Figures 2 and 3.

Solution of 6.25% w/v chloroacetonitrile in deuterium oxide containing sodium deuteroxide, followed by neutralisation with

DCl/D_2O and subsequent isolation yielded crystalline [2-$^2H_2$]-2-chloroacetamide of very high isotopic purity in 66% yield from chloroacetonitrile. Detection of a volatile amine during the solvolysis indicated a possible reaction mechanism via 1-amino-2-chloro-acetylene[11].

It was found necessary to fully exchange the amide protons for deuterium before proceeding with the reaction with anhydrous sodium acetate, otherwise the small amount of acetic acid formed as a by-product in the reaction[12] caused some loss of label in the crystalline [2-$^2H_2$]-2-acetoxyacetamide (19). Lithium aluminium hydride reduction of this compound gave [1-$^2H_2$]-2-aminoethanol isolated as [2-$^2H_2$]-2-bromoethylamine hydrobromide[13] (20).

The hydrobromide of the salt was exchanged for hydrochloride by means of Dowex 1 ion exchange resin (chloride form) and the anhydrous product reacted with nitrosyl chloride in acetonitrile solution.

Isolation of the small amount of product was achieved by careful addition of water and sedimentation assisted by bench

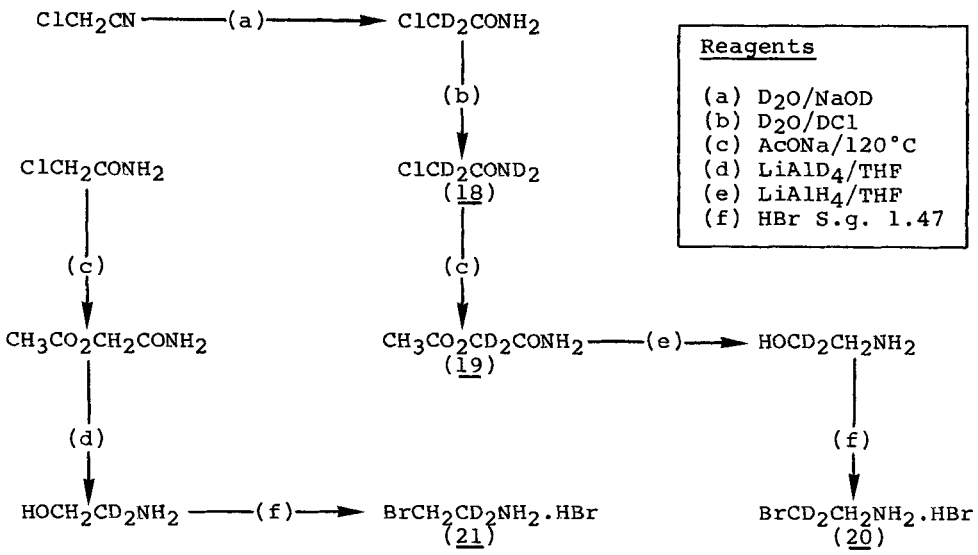

Figure 2

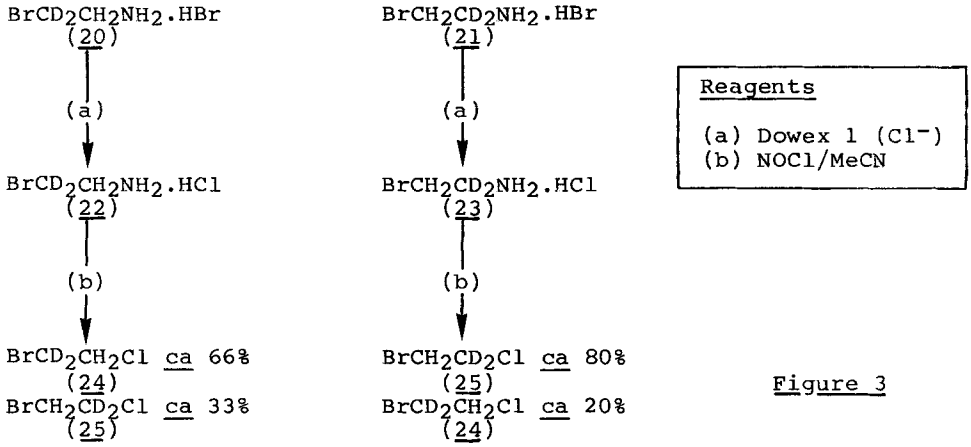

Figure 3

centrifugation. An alternative isolation procedure involving saturation of the reaction mixture with hydrogen bromide was investigated[14].

Reaction of the analogous [2-$^2H_2$]-2-chloroethylamine hydrobromide[15] with nitrosyl bromide was abandoned due to the impure product obtained (believed to have resulted from impure synthetic nitrosyl bromide used). Instead, 2-acetoxyacetamide was reduced with lithium aluminium deuteride and [1-$^2H_2$]-2-bromoethylamine hydrochloride (23) subsequently obtained.

The products from the nitrosyl chloride reaction were predominantly 1-bromo-2-chloroethanes ca 60% (Figure 3), but significant amounts of 1,2-dibromoethane and 1,2-dichloroethane were also present. They were examined by gas chromatography, NMR spectroscopy, mass spectroscopy (MS) and MS/MS. Reference to the electron impact mass spectrum (MS) of authentic d_0-1-bromo-2-chloroethane indicated the molecular ion (M/Z 142) and a fragment (M/Z 107) corresponding to loss of a chlorine radical. The fragment M/Z 93 indicating loss of CH_2Cl was also significant. In an MS/MS instrument, both the molecular ion M/Z 142 and ion M/Z 107 yielded a daughter ion M/Z 93. These fragmentations were used to assess the isotopic species composition of the nitrosyl chloride reaction products by MS/MS. For the deuteriated compounds the

corresponding ions would be M/Z 144 and M/Z 109, yielding M/Z 93 and 95. In the MS/MS instrument, M/Z 109 (from both [$^2H_2$]-1-bromo-2-chloroethanes), was observed to yield equal amounts of daughter ions M/Z 93 and M/Z 95 indicating either structural rearrangement of M/Z 109 before further fragmentation or an equal mixture of [1-$^2H_2$]-1-bromo-2-chloroethane (24) and [2-$^2H_2$]-1-bromo-2-chloroethane (25) from either preparation. Their differing NMR spectra indicated that the latter was not the case. The instability of the $(BrCD_2CH_2)^+/(BrCH_2CD_2)^+$ species [presumably because of isomerisation to $(^+BrCH_2CD_2)$] realised in the preparations was elegantly demonstrated. Direct fragmentation of the molecular ion M/Z 144 in the MS/MS instrument gave a ratio M/Z 93 : M/Z 95 = ca 1:2 in three different preparative samples of [1-$^2H_2$]-1-bromo-2-chloroethane, whereas only M/Z 95 ($^+CD_2Br$) would exist if the sample were isotopically pure. These results were confirmed by examination of ($^+CH_2Cl$)M/Z 49 originating from M/Z 144. M/Z 49:M/Z 51 was ca 2 : 1, whereas only M/Z 49 would derive from an isotopically pure sample. In the case of [2-$^2H_2$]-1-bromo-2-chloroethane the sample gave M/Z 93:M/Z 95 = ca 4:1. The deuterated 1-bromo-2-chloroethane compositions are summarised in Figure 3.

EXPERIMENTAL

M.p.s were determined on a Mettler FP 5 hot stage apparatus. Thin layer chromatography (TLC) was carried out on aluminium backed silica gel plates (Merck Silica Gel $60F_{254}$, No. 5554). Where necessary compounds were purified by column chromatography using Merck Silica Gel 60 - No. 7734 or silanised No. 7734[16]. NMR spectra were recorded on a Perkin Elmer R12B 60MHz spectrometer in $CDCl_3$ or CCl_4 with tetramethylsilane (TMS) or in D_2O with 3-(trimethylsilyl)-1-propanesulphonic acid sodium salt (DSS), as internal standards. Mass spectra were determined

with a VG Analytical 70-70 mass spectrometer using either electron impact ionisation (70 eV) or chemical ionisation (50 eV) with isobutane as the reagent gas. Collision activated decomposition mass spectra were determined on a VG-70-SEQ mass spectrometer using air as the collision gas. Gas chromatographic analyses were achieved with a Carlo Erba HRGC 5160 Mega Series gas chromatograph using a fused silica capillary (25m x 0.32 mm I.D.) coated with SE52 maintained at 50°C and flame ionisation detection. Sodium hydride used throughout was 100% fused beads (BDH Chemicals Ltd., Poole, U.K.). We found that this was particularly safe and convenient in use, although replacement supplies are apparently not available. Extreme caution should be exercised and a nitrogen atmosphere employed with efficient ice bath cooling where dry powder is substituted. Sodium hydride oil dispersions or sodium amalgam were less convenient to use.

[2-$^2H_2$]-2-Benzyloxyacetic acid (1) 2-Benzyloxyacetic acid[9] (16.6 g, 100 mmol) was dissolved in dry tetrahydrofuran (150 ml), ice cooled and treated with sodium hydride (2.4 g 100% fused) under nitrogen. After stirring overnight at room temperature, the product (17.6 g, 93.5%) was collected by filtration, washed with tetrahydrofuran, and dried *in vacuo*. Sodium 2-benzyloxyacetate (12 g, 64 mmol) was dissolved by heating in deuterium oxide (50 ml, 99.8 atom % ^2H, Aldrich Chemical Co. Ltd.) which had been treated previously with sodium hydride (5 g, fused 100%). The mixture was incubated overnight in a stoppered Pyrex bottle at 110°C. After cooling, the mixture was cautiously acidified (6M HCl). Separated product was ether extracted from the precipitated silicic acid and sodium chloride after dilution with brine. The procedure was repeated three times. The respective recoveries were 10.5 g; 10.2 g; and 9.9 g (92%) [2-$^2H_2$]-2- benzyloxyacetic acid (1) after drying (anhydrous sodium sulphate) and concentrating the ether extracts.

(1) δ ($CDCl_3$) : 7.35 (5H,s); 4.63 (2H,s).

M/Z:168$(M)^+$ 3.1%; 107 $(C_6H_5CH_2O)^+$ 89%; 91 $(C_6H_5CH_2)^+$ 100%.

[1-$^2H_2$]-2-Benzyloxyethanol (3), [1,2-$^2H_4$]-2-benzyloxyethanol (4), and [2-$^2H_2$]-2-benzyloxyethanol (5).

[2-$^2H_2$]-2-Benzyloxyacetic acid (1) (7.4 g, 44 mmol) in chloroform (20 ml) was treated with excess thionyl chloride (9 ml), heated under reflux (1 hour) and allowed to cool. Ethanol (25 ml) was added and the mixture heated a further hour under reflux. After cooling and preliminary concentration by rotary evaporator, distillation under oil pump vacuum gave 6.9 g (80%) of colourless oil (2). Ethyl 2-benzyloxyacetate was prepared from 2-benzyloxyacetic acid in an identical fashion to that described for (2).

6.9 g (35 mmol) of (2) were dissolved in anhydrous diethyl ether (50 ml) and cautiously added to a suspension of lithium aluminium hydride (3.5 g, 92 mmol) in anhydrous ether (200 ml). The mixture was gently refluxed for 3 hours before the product was isolated by cautious addition of water (4 ml), filtration and ether washing of the filtered solids. The ether filtrate was dried (anhydrous sodium sulphate) and concentrated to give 1.9 g product. The filtered solid was dissolved in 6 M HCl with ice cooling and further product extracted into ether. After washing the latter extracts with dilute potassium carbonate solution, they were dried (anhydrous sodium sulphate) and concentrated to yield a further 3.45 g of product. Total (5), 5.35 g (98%).

Ethyl 2-benzyloxyacetate (4.5 g, 23 mmol) was reduced by lithium aluminium deuteride (98 atom % ^2H), Aldrich Chemical Co. Ltd., 1.35 g, 32 mmol) in a total of 60 ml anhydrous diethyl ether. Work-up as above gave (3) (3.5 g, 98%). Similar results were obtained when (2) was reduced by lithium aluminium deuteride to yield (4).

(2) δ ($CDCl_3$): 7.35 (5H, s); 4.63 (2H, s); 4.23 (2H, q);

1.28 (3H, t). M/Z : 167 $(M-C_2H_5)^+$ 10%; 150 $(M-C_2H_5OH)^+$ 3%; 107 $(C_6H_5CH_2O)^+$ 35%; 91 $(C_6H_5CH_2)^+$ 100%.

(3) δ ($CDCl_3$): 7.35 (5H, s); 4.55 (2H, s); 3.56 (2H, s); 2.55 (1H, s).

(4) δ ($CDCl_3$): 7.35 (5H, s); 4.55 (2H, s); 2.38 (1H, s).

(5) δ ($CDCl_3$): 7.35 (5H, s); 4.55 (2H, s); 3.75 (2H, s); 2.36 (1H, s). M/Z : 154 $(M)^+$ 10%; 107 $(C_6H_5CH_2O)^+$ 15%; 91 $(C_6H_5CH_2)^+$ 100%.

[1-$^2H_2$]-2-Benzyloxyethyl-p-toluene sulphonate (8), [1,2-$^2H_4$]-2-benzyloxyethyl-p-toluene sulphonate (7) and [2-$^2H_2$]-2-benzyloxyethyl-p-toluene sulphonate (6).

(3), (5 g, 32.5 mmol) in dry pyridine (10 ml) was mixed with p-toluene sulphonyl chloride (7 g, 36.8 mmol) in dry pyridine (30 ml) at 0°C and stirred 2 hours before stirring overnight at 5°C. The mixture was acidified (6M HCl) and extracted three times with dichloromethane. Combined extracts were washed with dilute sodium bicarbonate solution, dried (anhydrous sodium sulphate) and after preliminary solvent removal (rotary evaporator), the residue was evacuated by rotary oil pump to give 8.2 g of spontaneously crystallising crude product. It was redissolved in diethyl ether, treated with charcoal, Hyflo Super-Cel to remove a little insoluble oil, and recrystallised by addition of sufficient petroleum ether b.p. 40-60°C. 6.7 g (73%) of colourless crystalline (8) was obtained. A little further product was recovered from the reconcentrated mother-liquor by silica/chloroform column chromatography. Similar results were obtained when (5) (6 g, 39 mmol) in pyridine (12 ml) was treated with p-toluene sulphonyl chloride (8.4 g, 44 mmol) in pyridine (36 ml) at 0°C. After work-up, 9.8 g of crude crystalline (6) resulted; recrystallisation as above yielded 8.4 g (70%). After (4) (1.6 g, 10.25 mmol) had been treated with p-toluene sulphonyl chloride (2.0 g, 10.5 mmol) in dry pyridine (10 ml) for 4 hours

on ice, the crude product, which separated as an oil on acidification, readily crystallised before dichloromethane extraction. Ultimately 2.1 g (68.5%) of colourless re-crystallised (7) were obtained as first crop and a further 0.29 g as second crop from the mother-liquor after Hyflo Super-Cel treatment and concentration.

(6) δ ($CDCl_3$): 7.54 (4H, m); 7.29 (5H, s); 4.48 (2H, s); 4.19 (2H, s); 2.42 (3H, s). M/Z : 308 $(M)^+$ 1.8%; 172 $(TosOH)^+$ 11.6%; 106 25.6%; 91 $(C_6H_5CH_2)^+$ 100%. M.p. 41°C.

(7) δ ($CDCl_3$): 7.54 (4H, m); 7.3 (5H, s); 4.48 (2H, s); 2.42 (3H, s).

(8) δ ($CDCl_3$) : 7.54 (4H, m); 7.29 (5H, s); 4.48 (2H, s); 3.65 (2H, s); 2.42 (3H, s). M/Z : 308 $(M)^+$ 1.4%; 172 $(TosOH)^+$ 10.4%; 106 22.8%; 91 $(C_6H_5CH_2)^+$ 100%. M.p. 41°C.

[1-$^2H_2$]-2-Benzyloxyethyl bromide (9), [1,2-$^2H_4$]-2-benzyloxyethyl bromide (10) and [2-$^2H_2$]-2-benzyloxyethyl bromide (11).

3.08g (10 mmol) of (6) were refluxed with 6.44g (20 mmol) of tetra-n-butylammonium bromide in acetone (40 ml) for 1 hour. After cooling, an equal volume of water was added, and the mixture extracted with diethyl ether three times. After drying (anhydrous sodium sulphate) and concentration of the pooled ether extracts followed by rotary oil pump evacuation, 2.1g (97%) of a yellow oil was obtained (11). An identical experiment using (8) yielded the same quantity of (9). 1.8g (5.8 mmol) of (7) refluxed in acetone (25 ml) with tetrabutylammonium bromide (3.75g, 11.6mmol) gave 1.2g (95%) of (10).

(9) δ ($CDCl_3$): 7.35 (5H,s); 4.59 (2H,s); 3.79 (2H,s). M/Z: 216/218 $(M)^+$ 6.2%; 121 $(M-CD_2Br)^+$ 1.3%; 109/111 $(CH_2CD_2Br)^+$ 6.2%; 91 $(C_6H_5CH_2)^+$ 100%.

(10) δ ($CDCl_3$): 7.35 (5H,s); 4.59 (2H,s). [3.62 (4H,m) present in 2-benzyloxyethyl bromide, absent].

(11) δ ($CDCl_3$): 7.35 (5H,s); 4.59 (2H,s); 3.46 (2H,s). M/Z: 216/218 $(M)^+$ 8.4%; 123 $(M-CH_2Br)^+$ 1.3%; 109/111 $(CD_2CH_2Br)^+$ 6.3%; 91 $(C_6H_5CH_2)^+$ 100%.

[1-$^2H_2$]-2-Bromoethanol (14), [1,2-$^2H_4$]-2-bromoethanol (13), and [2-$^2H_2$]-2-bromoethanol (12).

(9) (4.54g, 21 mmol) dissolved in methanol (40 ml) containing a suspension of palladium (10%) on carbon catalyst (0.4g) was left stirring overnight under slight hydrostatic pressure of hydrogen. After filtering to remove catalyst which was washed with methanol, the filtrate was carefully distilled at atmospheric pressure from a 100°C oil bath through a short Vigreux column. The distillate (65-67°C) contained toluene. Remaining methanol was removed by water pump evacuation at low temperature, and (14) was finally distilled under water pump vacuum, b.p. 64-65°C ca 2 cm. 1.83g (69%). 5.74g (26.4 mmol) of (11) in methanol (50 ml) and 0.4g catalyst treated as above gave 2.32g (69%) of (12). When (10), (12.7g) was dissolved in methanol (100 ml) some opacity was observed although treatment with Hyflo Super-Cel had no effect on this. Hydrogenolysis with catalyst (0.5g) failed. The filtered methanol solution was concentrated and the residue dissolved in diethyl ether. It was filtered through a short silica gel column to remove a little insoluble oil which remained. 11.0g (50 mmol) of purified (10) were successfully deprotected under hydrogen in methanol (50 ml) with 0.5g catalyst. 5.5g (85%) of (13) were isolated.

(12) δ ($CDCl_3$): 3.52 (2H,s); 2.36 (1H,s). M/Z: 126/128 $(M)^+$ 10.7%; 47 $(CH_2CD_2OH)^+$ 77.2%; 33 $(CD_2OH)^+$ 100%.

(14) δ ($CDCl_3$): 3.91 (2H,s); 2.15 (1H,s). M/Z: 126/128 $(M)^+$ 4.5%; 47 $(CD_2CH_2OH)^+$ 69.1%; 31 $(CH_2OH)^+$ 100%.

[2,3,-$^2H_4$]-3-hydroxypropionitrile (15).

(13), (5.5g, 42.5 mmol), in deuteriomethanol (CH_3O^2H) (5 ml) was added to a solution of 4.4g (90 mmol) sodium cyanide in

deuteriomethanol (75 ml) and the mixture refluxed 2 hours. Deuteriomethanol was recovered by distillation from the red solution, and the residue finally concentrated by rotary evaporator before adding chloroform. The solids were removed by filtration, the filtrate reconcentrated, and the residue distilled under rotary oil pump vacuum to yield 2.42g (76%) of crude (15).

(15) δ($CDCl_3$) 3.3 (1H,s). M/Z: 42 $(CD_2CN)^+$ 46.2%; 33 $(CD_2OH)^+$ 100%

[$^2H_3$]-Acrylonitrile (16).

(15), (1g, 13.3 mmol) was cooled in ice in a miniature distillation apparatus and phosphorus pentoxide (2.5g) cautiously added before applying heat by means of a bunsen burner. Dehydrated product evolved (16), (0.39g, 52%), was condensed and collected in the receiving flask.

[$^2H_3$]-Acrylamide (17).

75% v/v concentrated sulphuric acid in water (5 ml) was ice cooled and added to (16) (0.39g, 7 mmol) on ice. The mixture was incubated at 65°C for 4 hours before cooling. The acid was neutralised by addition of solid sodium bicarbonate and methanol added simultaneously. The methanolic solution was filtered, concentrated (rotary evaporator), and redissolved in benzene with heating under reflux, refiltered and reconcentrated to yield (17) (0.36g, 70%). Recrystallisation from hot benzene gave 0.33g pure crystalline material. M/Z(EI): 74 $(M)^+$ 100%; 58 $(M-NH_2)^+$ 82%; 44 $(CONH_2)^+$ 36.6%; 30 $(CD_2{=}CD)^+$ 100%. M/Z(CI): 75 $(MH)^+$ 100%, 74 8.6%. M.p. 81-83°C.

[2-$^2H_2$]-2-Chloroacetamide (18).

Chloroacetonitrile (0.5g, 6.6 mmol) was added to deuterium oxide (8 ml, 99.8 atom % ^2H, Aldrich Chemical Co. Ltd.), in which was previously dissolved sodium hydride (50 mg; fused 100%). It rapidly dissolved when the stoppered flask was agitated in a

water bath at 70°C. When dissolved, the mixture was cooled in ice and just acidified by dropwise addition of deuterium chloride solution (20 wt % solution in deuterium oxide 99+ atom % ^2H, Aldrich Chemical Co. Ltd.) and concentrated (rotary evaporator) at 37°C. The residue was dried over phosphorus pentoxide *in vacuo* (2 hours), then Soxhlet extracted with dry diethyl ether (18 hours). Concentration of the ether in which it was sparingly soluble yielded 418 mg (66%) of colourless crystalline product. It was dissolved in deuterium oxide (2 ml) by warming at 50-60°C, reconcentrated and dried over phosphorus pentoxide *in vacuo*. This procedure was repeated. The ^1H NMR spectrum of (18) in acetone-d_6 had no detectable signals. Larger quantities were accumulated by treatment of 0.5g or 1.0g chloroacetonitrile *pro rata* with deuterium oxide. The neutralised, concentrated residues were pooled for isolation.

(18) M/Z: 97/99 $(M)^+$ 19.3%; 51/53 $(CD_2Cl)^+$ 12.6%; 46 $(COND_2)^+$ 100%. M.p. 115.5-117.5°C.

[2-$^2H_2$]-2-Acetoxyacetamide (19).

(18) (4.2g, 43 mmol) was mixed with anhydrous sodium acetate (3.6g, 44 mmol) in a stoppered bottle and heated (120°C, 2 hours). After cooling, the mixture was dissolved in chloroform, treated with activated charcoal, a little solid potassium carbonate, filtered and concentrated (rotary evaporator). The crude residue spontaneously crystallised, (4.95g). Recrystallisation from hot chloroform yielded 2.7g pure material. The dark brown mother-liquors were concentrated and applied to a short silica column and eluted with acetonitrile. Effluent was reconcentrated and the residue recrystallised from chloroform/diethyl ether, (0.83g). Total colourless crystalline (19), 3.53g (68%). 2-Acetoxyacetamide was obtained similarly from 2-chloroacetamide and sodium acetate.

(19) δ ($CDCl_3$): 2.16 (3H,s). [7.15-5.75 (2H,s, broad) and 4.56

(2H,s) present in 2-acetoxyacetamide, absent from (19)].

M/Z: 120 $(MH)^+$ 1.1%; 119 $(M)^+$ 0.8%; 87 $(M-CD_2O)^+$ 13.3%; 76 $(M-COCH_3)^+$ 41.9%; 43 $(CH_3CO)^+$ 100%. M.p. 90-92°C.

[1-$^2H_2$]-2-Aminoethanol and [2-$^2H_2$]-2-aminoethanol.

(19), (3.0g, 25 mmol), dissolved in dry tetrahydrofuran (50 ml) was cautiously added to lithium aluminium hydride (3.0g, 79 mmol) suspended in dry tetrahydrofuran (120 ml) under nitrogen, and refluxed (3 hours). After cooling, the complex mixture was treated with water (12 ml) cautiously added portion-wise. The suspension was filtered at the pump and the solids Soxhlet extracted overnight. Filtrate and Soxhlet extracts were combined and carefully concentrated to a small volume by distillation. 2-Acetoxyacetamide (3.0g) was reduced with lithium aluminium deuteride (3.0g) exactly as above.

[1-$^2H_2$]-2-Bromoethylamine hydrobromide (21) and [2-$^2H_2$]-2-bromoethylamine hydrobromide (20).

The crude 2-aminoethanol extract, concentrated to a few millilitres, (above) containing water and tetrahydrofuran was cooled in ice and excess (15 ml) of constant boiling hydrobromic acid added. The mixture was heated under a long helices packed column (ϕ 1 cm x 15 cm long), still head, reflux condenser and receiver attached. Residual tetrahydrofuran boiled off as 1,4-dibromobutane, collected as a dense oil on separation from the aqueous hydrobromic acid in the receiver. Hydrobromic acid (s.g. 1.47) was added to the distillation flask as necessary. Alternate periods of reflux and distillation[13] continued over five days were needed for complete conversion. Finally, the mixture was concentrated to dryness *in vacuo* and stored over KOH/P_2O_5. The dry crude residue was recrystallised from hot acetonitrile (3% w/v solution) with activated charcoal pre-treatment. The colourless crystals (20) or (21) (2.5g, 50%) were washed with diethyl ether. Alternatively, the dry crude product

was redissolved in water and filtered through a short column of silanised silica; the almost colourless effluent was concentrated (rotary evaporator) and dried *in vacuo* over KOH/P_2O_5.

[1-$^2H_2$]-2-Bromoethylamine hydrochloride (23) and [2-$^2H_2$]-2-bromoethylamine hydrochloride (22).

(20) or (21) (2.4g) dissolved in a little water was applied to a column (ϕ 2 cm x 25 cm) of Dowex 1 (Cl^- form) and water eluted. Effluent was collected, concentrated (rotary evaporator), and fully dried *in vacuo* over KOH/P_2O_5 (yield 1.9g in either case).

(22) δ(D_2O): 3.49 (2H,s). M/Z: 125/127 $(M)^+$ 1.8%; 95/97 $(M-CH_2NH_2)^+$ 1.6%; 80/82 $(HBr)^+$ 27.7%; 79/81 $(Br)^+$ 17.5%; 30 $(CH_2NH_2)^+$ 100%.

(23) δ(D_2O): 3.89 (2H,s). M/Z: 125/127 $(M)^+$ 1.4%; 93/95 $(M-CD_2NH_2)^+$ 1.0%; 80/82 $(HBr)^+$ 17.4%; 79/81 $(Br)^+$ 9.3%; 36/38 $(HCl)^+$ 42.2%; 32 $(CD_2NH_2)^+$ 100%.

[1-$^2H_2$]-1-Bromo-2-chloroethane (24) and [2-$^2H_2$]-1-bromo-2-chloroethane (25)

0.5g (2.4 mmol) of either anhydrous (22) or (23) suspended in acetonitrile (1 ml) in a stoppered conical centrifuge tube was reacted with excess nitrosyl chloride (Air Products) at room temperature. After standing overnight, water (2 ml) was added and thoroughly mixed.

Dark oil which separated was collected (bench centrifugation) and washed with an equal volume of dilute sodium bicarbonate solution to remove acidity, and finally water. The crude reaction product (200 mg) was part-purified by filtering through a little activated alumina (500 mg) in diethyl ether solution, and carefully concentrated to an oil (100 mg).

(24) δ($CDCl_3$): 3.85-3.7 [m, fine structure identical to (25)]. M/Z: 144/146 $(M)^+$ 2.6%; 109/111 $(CH_2CD_2Br)^+$ 3.8%; 65 $(CD_2CH_2Cl)^+$ 57.7%.

(25) δ (CCl_4): 3.62-3.47 [m, fine structure identical to (24)].
M/Z: 144/146 $(M)^+$ 7.8%; 109/111 $(BrCH_2CD_2)^+$ 6.3%; 65 $(CH_2CD_2Cl)^+$ 100%.

Acknowledgements: We thank Mr. J.H. Lamb for obtaining the mass spectral data, and Dr. E. Bailey and Mr. A. Brooks for capillary gas chromatographic analyses.

REFERENCES

1. Calleman, C.J., Ehrenberg, L., Jansson, B., Osterman-Golkar, S., Segerbäck, D., Svensson, K. and Wachtmeister, C.A. - J. Environ. Pathol. Toxicol. 2:427 (1978).
2. Osterman-Golkar, S., Farmer, P.B., Segerbäck, D., Bailey, E., Calleman, C.J., Svensson K. and Ehrenberg, L. - Teratog. Carcinog. Mutagen. 3:395 (1983).
3. Farmer, P.B., Bailey, E., Gorf, S.M., Tornqvist, M., Osterman-Golkar, S., Kautiainen, A. and Lewis-Enright D.P. - Carcinogenesis 7:1519 (1986).
4. Bailey, E., Farmer, P.B., Bird, I., Lamb, J.H. and Peal, J.A. - Anal. Biochem. 157:241 (1986).
5. Sroog, C.E., Chih, C.M., Short, F.A. and Woodburn, H.M. - J. Amer. Chem. Soc. 71:1710 (1949).
6. Nystrom, R.F. - J. Amer. Chem. Soc. 81:610 (1959).
7. Hogg, J.L. and Schowen, R.L. - J. Pharm. Sci. 63:1620 (1974).
8. Ramalingam, K. and Woodard, R.W. - J. Labelled Compounds XXIV:369 (1987).
9. Campbell, J.B. - J. Chem. Soc. Perkin Trans. 1:1213 (1983).
10. Ives, D.J.G. and Wilks, G.C. - J. Chem. Soc. 1455 (1938).
11. 'Rodd's Chemistry of Carbon Compounds', 2nd edition, Vol. 1., Part A, p. 524, Elsevier Publishing Co. London, (1964).

12. Ratchford, W.P., Lengel, J.H. and Fisher, C.H. - J. Amer. Chem. Soc. 71:647 (1949).

13 Org. Synth., Coll. Vol. 2:91 (1943).

14. Janz, G.J. and Danyluk, S.S. J. Amer. Chem. Soc. 81:3850 (1959).

15. Ward, J. - J. Amer. Chem. Soc. 57:914 (1935).

16. Little, C.J., Dale, A.D., Whatley, J.A. and Evans, M.B. - J. Chromatog. 171:(a)431, (b)435 (1979).